इंटरनेट मानक

Disclosure to Promote the Right To Information

Whereas the Parliament of India has set out to provide a practical regime of right to information for citizens to secure access to information under the control of public authorities, in order to promote transparency and accountability in the working of every public authority, and whereas the attached publication of the Bureau of Indian Standards is of particular interest to the public, particularly disadvantaged communities and those engaged in the pursuit of education and knowledge, the attached public safety standard is made available to promote the timely dissemination of this information in an accurate manner to the public.

"जानने का अधिकार, जीने का अधिकार"
Mazdoor Kisan Shakti Sangathan
"The Right to Information, The Right to Live"

"पुराने को छोड नये के तरफ"
Jawaharlal Nehru
"Step Out From the Old to the New"

IS/ISO 7131 (1997): Earth-moving machinery - Loaders - Terminology and commercial specifications [MED 7: Material Handling Systems and Equipment]

"ज्ञान से एक नये भारत का निर्माण"
Satyanarayan Gangaram Pitroda
"Invent a New India Using Knowledge"

Act Number 22 of 2005
The Indian Parliament
RIGHT TO INFORMATION

Made Available By
Public.Resource.Org

"ज्ञान एक ऐसा खजाना है जो कभी चुराया नहीं जा सकता है"
Bhartṛhari—Nītiśatakam
"Knowledge is such a treasure which cannot be stolen"

BLANK PAGE

BRUTUM FULMEN

IGNORANTIA JURIS NON EXCUSAT

PROTECTED BY COPYRIGHT

भारतीय मानक

मिट्टी उठाने की मशीनरी — लोडर — शब्दावली और व्यापारिक विशिष्टियाँ

Indian Standard

EARTH-MOVING MACHINERY — LOADERS — TERMINOLOGY AND COMMERCIAL SPECIFICATIONS

ICS 01.040.53; 53.100

© BIS 2007

BUREAU OF INDIAN STANDARDS
MANAK BHAVAN, 9 BAHADUR SHAH ZAFAR MARG
NEW DELHI 110002

October 2007

Price Group 10

NATIONAL FOREWORD

This Indian Standard which is identical with ISO 7131 : 1997 'Earth-moving machinery — Loaders — Terminology and commercial specifications' issued by the International Organization for Standardization (ISO) was adopted by the Bureau of Indian Standards on the recommendation of the Material Handling Systems and Equipment Sectional Committee and approval of the Mechanical Engineering Division Council.

The text of ISO Standard has been approved as suitable for publication as an Indian Standard without deviations. Certain conventions are, however, not identical to those used in Indian Standards. Attention is particularly drawn to the following:

a) Wherever the words 'International Standard' appear referring to this standard, they should be read as 'Indian Standard'.

b) Comma (,) has been used as a decimal marker in the International Standards, while in Indian Standards, the current practice is to use a point (.) as the decimal marker.

In this adopted standard, reference appears to certain International Standards for which Indian Standards also exist. The corresponding Indian Standards, which are to be substituted in their respective places, are listed below along with their degree of equivalence for the editions indicated:

International Standard	*Corresponding Indian Standard*	*Degree of Equivalence*
ISO 6165 : 1987[1)] Earth-moving machinery — Basic types — Vocabulary	IS 12138 : 1993 Earth-moving machinery — Basic types — Vocabulary (*first revision*)	Identical
ISO 6746-1 : 2003 Earth-moving machinery — Definitions of dimensions and symbols — Part 1: Base machine	IS 11114 (Part 2) : 2006 Earth-moving machinery — Definitions of dimensions and symbols: Part 2 Base machine (*second revision*)	do
ISO 6746-2 : 2003 Earth-moving machinery — Definitions of dimensions and symbols — Part 2: Equipment	IS 11114 (Part 3) : 2006 Earth-moving machinery — Definitions of dimensions and symbols: Part 3 Equipment (*second revision*)	do
ISO 7546 : 1983 Earth-moving machinery — Loader and front loading excavator buckets — Volumetric ratings	IS 12206 : 1993 Earth-moving machinery — Loader and front loading excavator buckets — Volumetric rating	do
ISO 9249 : 1997 Earth-moving machinery — Engine test code — Net power	IS 13116 : 2006 Earth-moving machinery — Engine test code — Net power	do

The technical committee responsible for the preparation of this standard has reviewed the provisions of the following International Standard referred in this adopted standard and has decided that they are acceptable for use in conjunction with this standard:

International Standard	*Title*
ISO 3450 : 1996	Earth-moving machinery — Braking systems of rubber-tyred machines — Systems and performance requirements and test procedures
ISO 5010 : 1992	Earth-moving machinery — Rubber-tyred machines — Steering requirements

[1)] Since revised in 2006.

(*Continued on third cover*)

Indian Standard
EARTH-MOVING MACHINERY — LOADERS — TERMINOLOGY AND COMMERCIAL SPECIFICATIONS

1 Scope

This International Standard establishes terminology and the content of commercial literature specifications for self-propelled crawler and wheel loaders and their equipment.

It is applicable to loaders as defined in ISO 6165.

2 Normative references

The following standards contain provisions which, through reference in this text, constitute provisions of this International Standard. At the time of publication, the editions indicated were valid. All standards are subject to revision, and parties to agreements based on this International Standard are encouraged to investigate the possibility of applying the most recent editions of the standards indicated below. Members of IEC and ISO maintain registers of currently valid International Standards.

ISO 3450:1996, *Earth-moving machinery — Braking systems of rubber-tyred machines — Systems and performance requirements and test procedures.*

ISO 5010:1992, *Earth-moving machinery — Rubber-tyred machines — Steering requirements.*

ISO 5998:1986, *Earth-moving machinery — Rated operating load for crawler and wheel loaders.*

ISO 6014:1986, *Earth-moving machinery — Determination of ground speed.*

ISO 6016:—[1)], *Earth-moving machinery — Methods of measuring the masses of whole machines, their equipment and components.*

ISO 6165:1997, *Earth-moving machinery — Basic types — Vocabulary.*

ISO 6746-1:1987, *Earth-moving machinery — Definitions of dimensions and symbols — Part 1: Base machine.*

ISO 6746-2:1987, *Earth-moving machinery — Definitions of dimensions and symbols — Part 2: Equipment.*

ISO 7457:1983, *Earth-moving machinery — Measurement of turning dimensions of wheeled machines.*

ISO 7546:1983, *Earth-moving machinery — Loader and front loading excavator buckets — Volumetric ratings.*

ISO 8313:1989, *Earth-moving machinery — Loaders — Methods of measuring tool forces and tipping loads.*

ISO 9249:1997, *Earth-moving machinery — Engine test code — Net power.*

---

1) To be published. (Revision of ISO 6016:1982)

3 Definitions

For the purposes of this International Standard, the following definitions apply.

3.1 General

3.1.1 loader: Self-propelled crawler or wheeled machine, having front-mounted equipment primarily designed for loading operation (bucket use), which loads or excavates through forward motion of the machine. (See ISO 6165.)

NOTE — A loader work cycle normally comprises filling, elevating, transporting and discharging material.

3.1.1.1 compact loader: Loader (see 3.1), with an operating mass (see ISO 6016) of 4 500 kg or less, designed to work in confined spaces with the associated needs for greater manoeuvrability.

3.1.1.2 skid-steer loader: Loader (see 3.1.1.1) steered by variation of speed and/or direction of rotation between traction drives on opposite sides of a machine having fixed axles.

3.1.2 base machine: Loader without equipment, as described by the manufacturer's specifications.

NOTE — The machine should be provided with the necessary mountings and attachments to secure equipment (as shown in clause 5).

3.1.3 equipment: Set of components mounted onto the base machine to fulfil the primary design function.

3.1.4 attachment: Optional assembly of components that can be mounted onto the base machine for a specific use.

3.1.5 component: Part or an assembly of parts of a base machine, equipment or an attachment.

3.2 Masses

3.2.1 operating mass: Mass of the base machine with all standard equipment, operator (75 kg ± 3 kg), full fuel tank, full lubricating, hydraulic and cooling systems, and, where provided, with empty bucket, body or bowl.

3.2.2 shipping mass: Mass of the machine without operator, with full lubricating, hydraulic and cooling systems, 10 % of fuel tank capacity and with or without equipment, cab, canopy, roll-over protective structure (ROPS) or falling object protective structure (FOPS), as stated.

3.2.3 cab, canopy, ROPS or FOPS mass: Mass of cab, canopy, ROPS or FOPS with all their components and mountings required to secure these to the base machine.

3.3 Attachments

3.3.1 backhoe: A mechanism, attached to the back of the loader which excavates generally below ground level, elevates, swings and dumps material by action of a boom, arm, and bucket; the excavating motion is toward the machine.

NOTE — A backhoe has less than 360° swing.

3.3.2 scarifier: A mechanism having teeth for penetrating and loosening to shallow depths such materials as earth, asphaltic and gravel roads and similar surfaces.

NOTE — The scarifier is usually mounted on the back of the loader but may be mounted on the back of the bucket.

3.3.3 side dump bucket: A bucket which loads through forward motion of the machine and can dump to the side from an end of the bucket; it may also dump forward.

3.3.4 multi-purpose bucket: A bucket having a dozer-type mouldboard with hinges at the top to support a clam which can be opened to various positions providing for use as a dozer, scraper, clam or bucket.

3.3.5 pallet fork: A structure having tines for lifting, transporting and discharging warehouse-type pallets.

3.3.6 log fork (log grapple): A mechanism having tines and a top clamp for lifting, transporting, and discharging logs (see figure 22).

3.3.7 winch: A frame equipped with a drum and connected to the rear part of the base machine (see figure 23).

4 Base machine

4.1 Types of loaders

Loaders are classified according to the following attributes.

4.1.1 Undercarriage

There are two types:

a) crawler loader (figure 1), and

b) wheel loader (figure 2).

4.1.2 Engine location

Engine location may be:

a) front engine (figure 3), or

b) rear engine (figure 4).

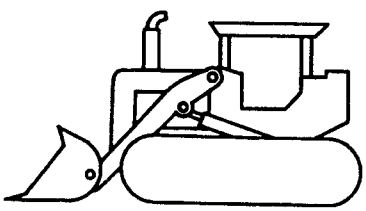

Figure 1 — Crawler loader

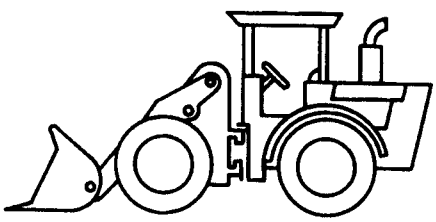

Figure 2 — Wheel loader

Figure 3 — Front engine

Figure 4 — Rear engine

4.1.3 Steering system

The steering system may be:

a) front wheel steer (figure 5),

b) rear wheel steer (figure 6),

c) all wheel steer (figure 7),

d) articulated steer (figure 8),

e) wheel skid steer (figure 9),

f) crawler skid steer (figure 10), or

g) crawler independent steer (figure 11).

4.1.4 Drive system

The drive system may be:

a) front wheel drive (figure 12),

b) rear wheel drive (figure 13), or

c) all wheel drive (figure 14).

4.2 Dimensions

See figures 15 and 16.

For definitions of dimensions, see ISO 6746-1.

For definitions of dimensions strictly related to loaders, see annex A.

4.3 Component nomenclature

See figure 17 for loader component nomenclature.

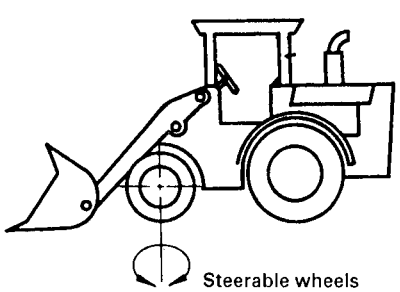

Figure 5 — Front wheel steer

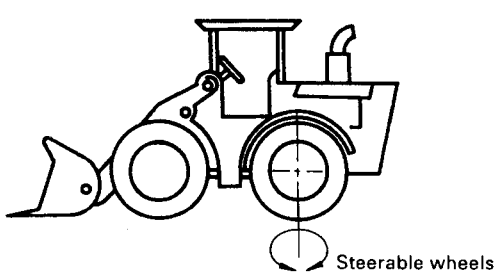

Figure 6 — Rear wheel steer

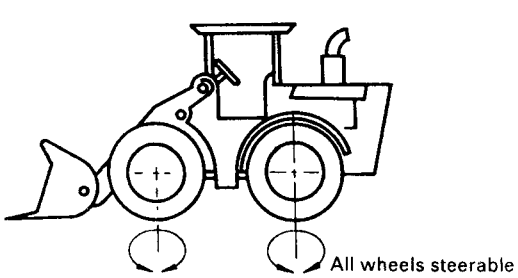

Figure 7 — All wheel steer

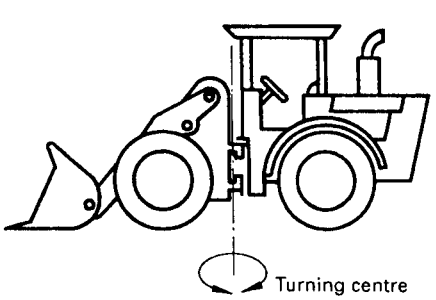

Figure 8 — Articulated steer

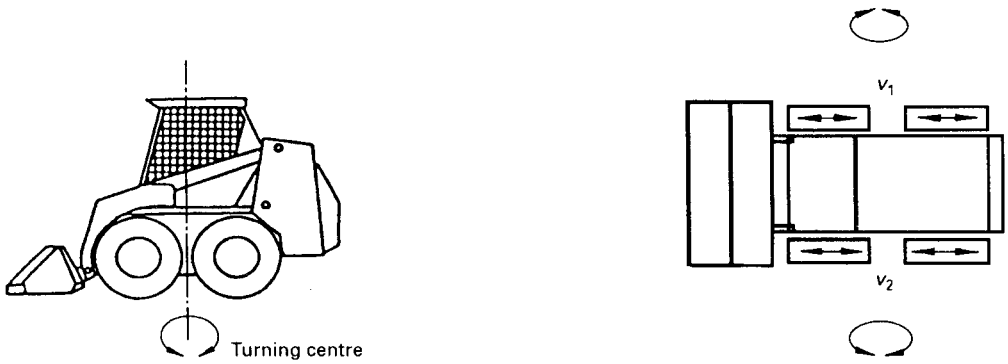

Figure 9 — Wheel skid steer $(v_1 \neq v_2)$

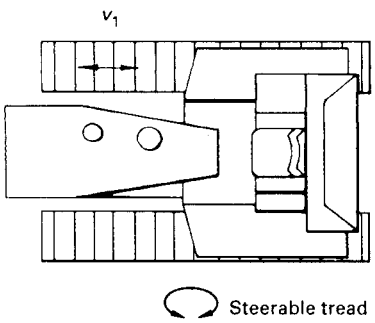

Figure 10 — Crawler skid steer

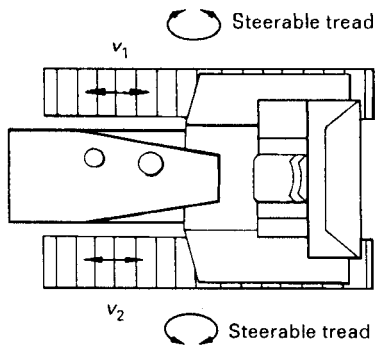

Figure 11 — Crawler independent steer $(v_1 \neq v_2)$

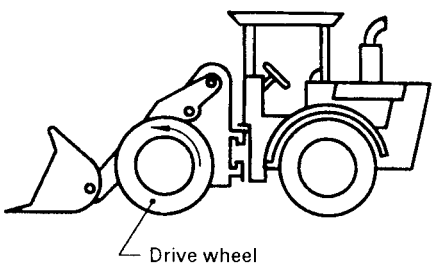

Figure 12 — Front wheel drive

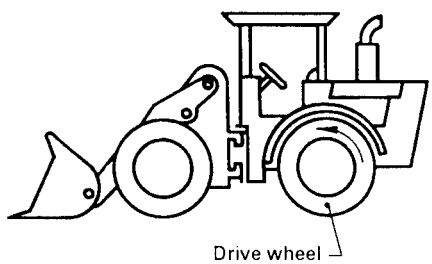

Figure 13 — Rear wheel drive

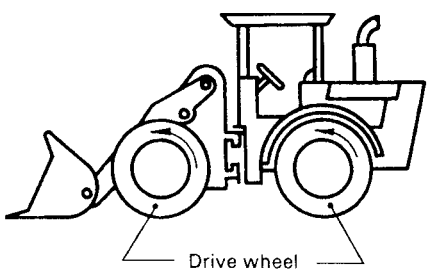

Figure 14 — All wheel drive

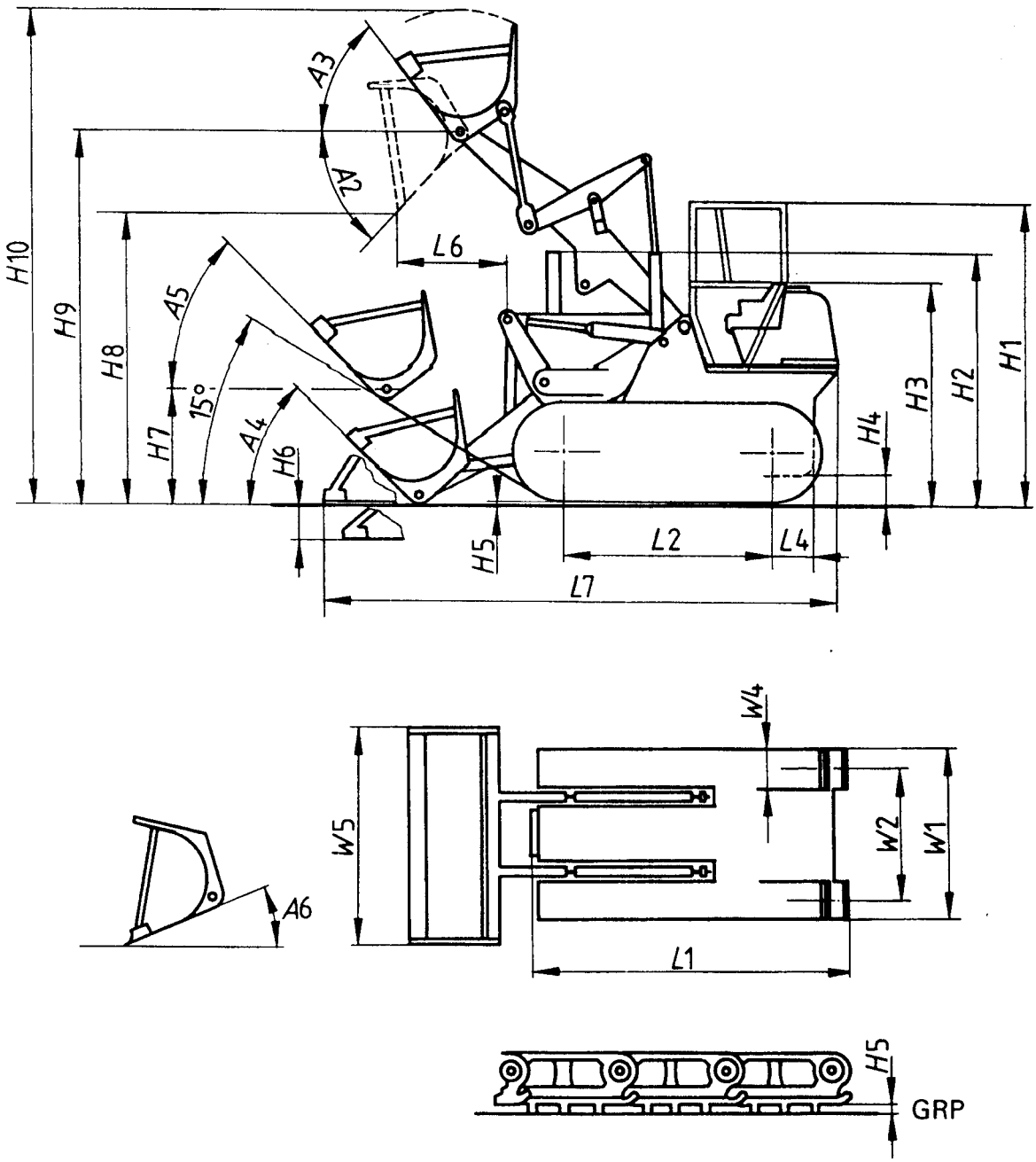

Figure 15 — Dimensions of base machine (crawler loader)

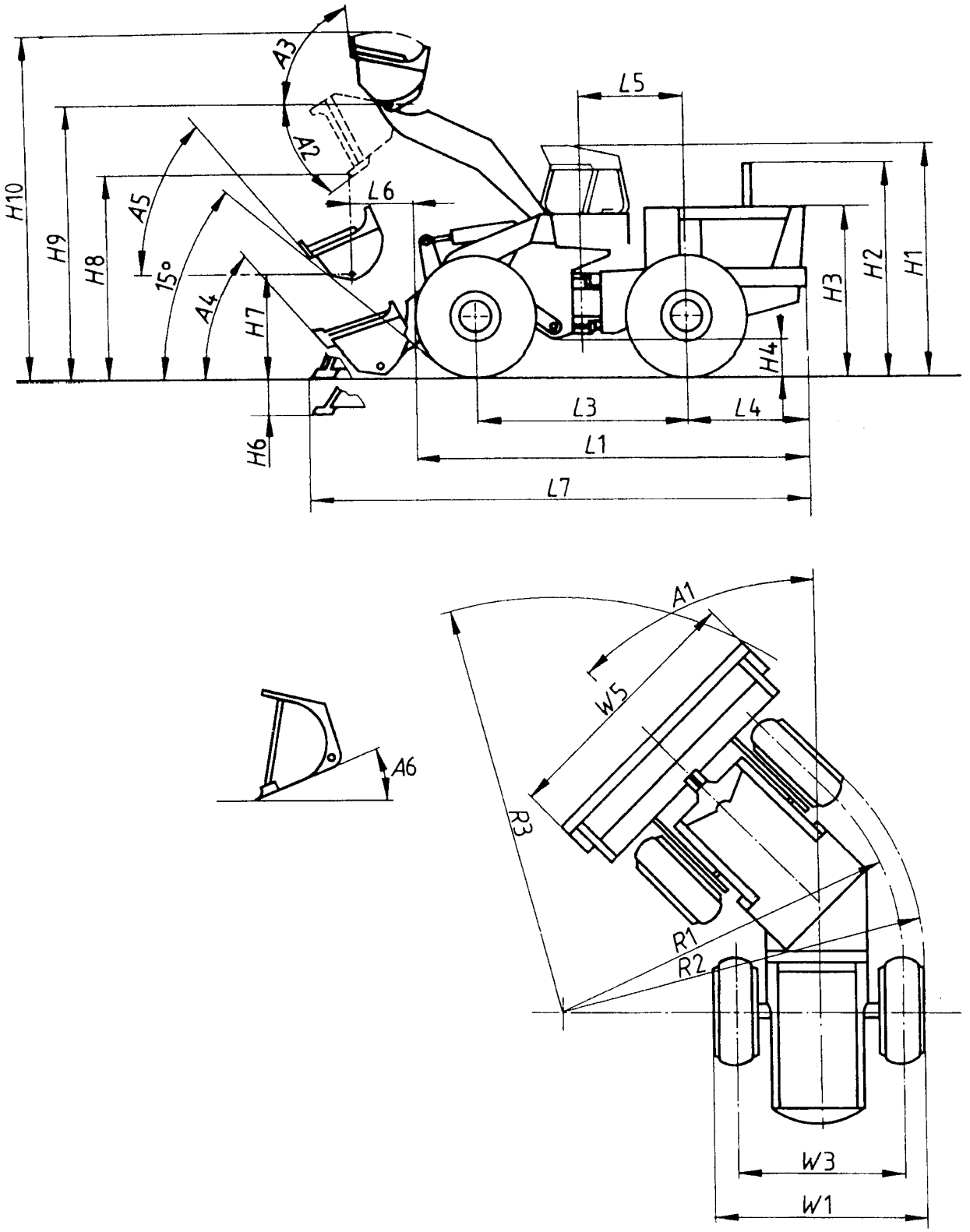

Figure 16 — Dimensions of base machine (wheel loader)

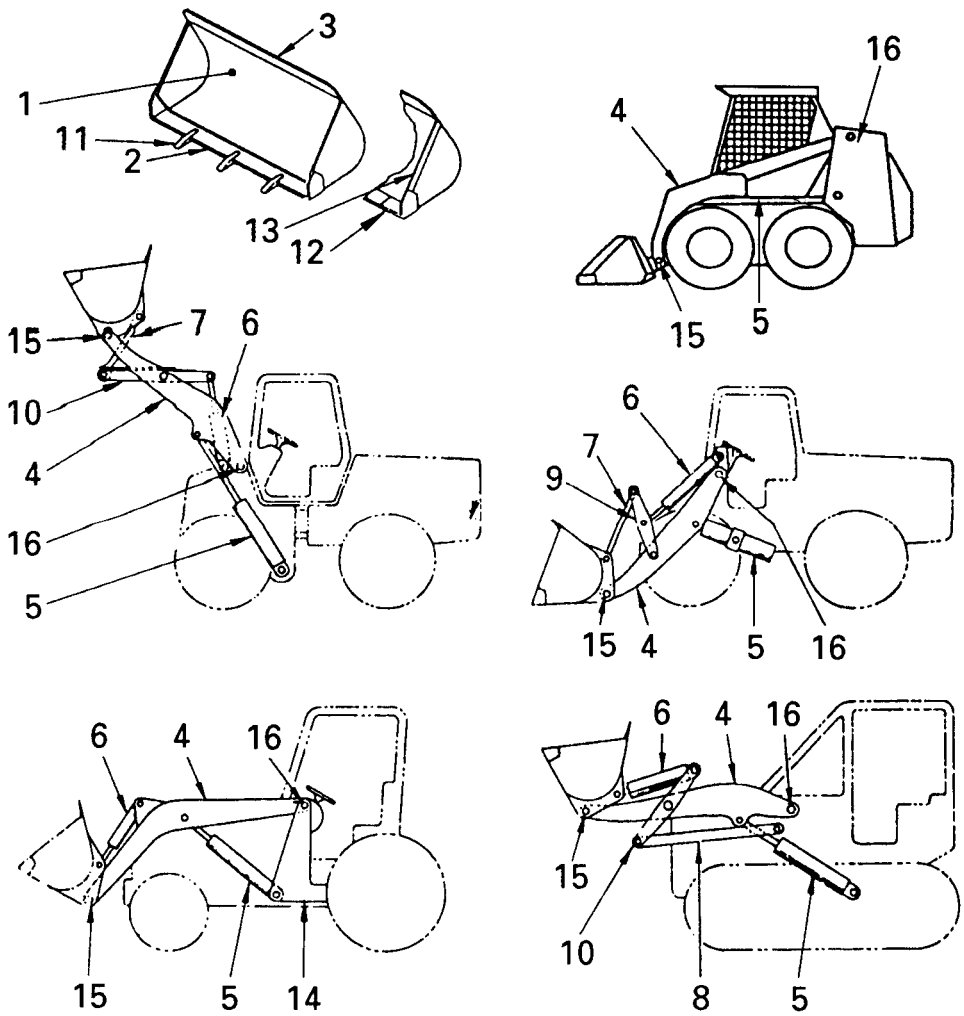

1	Bucket	9	Lever, bucket
2	Cutting edge	10	Bellcrank
3	Spillguard	11	Tooth, bucket
4	Lift arm	12	Cutter, corner
5	Cylinder, lift	13	Cutter, side
6	Cylinder, bucket	14	Frame, loader (where separate from machine main frame)
7	Link, bucket	15	Pin, bucket hinge
8	Link, guide	16	Pin, lift arm hinge

NOTE — "Front" or "rear" to be used when applicable to items 7, 8, 9 and 10.

Figure 17 — Loader component nomenclature

5 Equipment and attachments

5.1 Dimensions

For dimensions of attachments, see figures 18 to 24.

For definitions of dimensions, see ISO 6746-2.

For definitions of dimensions strictly related to loader equipment and attachments, see annex B.

5.2 Attachment nomenclature

See figure 25 for attachment nomenclature.

6 Permormance terminology

6.1 ISO net power (engine)

See ISO 9249.

6.2 Tipping load

See ISO 8313.

6.3 Tipping load at specified height

See ISO 8313.

6.4 Rated operating load

See ISO 5998.

6.5 Breakout force

This is the maximum sustained vertical upward force generated at a point 100 mm behind the lip of the bucket, when operating the lift cylinders or the tilt cylinders, and with the bottom of the cutting edge parallel with and 20 mm above the ground reference plane (GRP).

For buckets with a curved or pointed cutting edge, the forces shall be measured at the centre of the bucket width. (See ISO 8313.)

6.6 Raising time

This is the time required to raise the bucket with stated operating load from a position resting on the ground reference plane, fully rolled back to full height.

6.7 Lowering time

This is the time required to lower the empty bucket from full height to the position with bucket bottom lying on the ground reference plane.

6.8 Dump time

This is the time required to rotate the bucket from the maximum rollback — not exceeding the horizontal strike plane — fully raised position to the full dump position while dumping an operating load.

6.9 Maximum travel speeds

These are the maximum speeds that can be obtained on a hard level surface in each of the forward and reverse gear ratios with bucket empty (see ISO 6014).

6.10 Braking performance (wheel loader)

See ISO 3450.

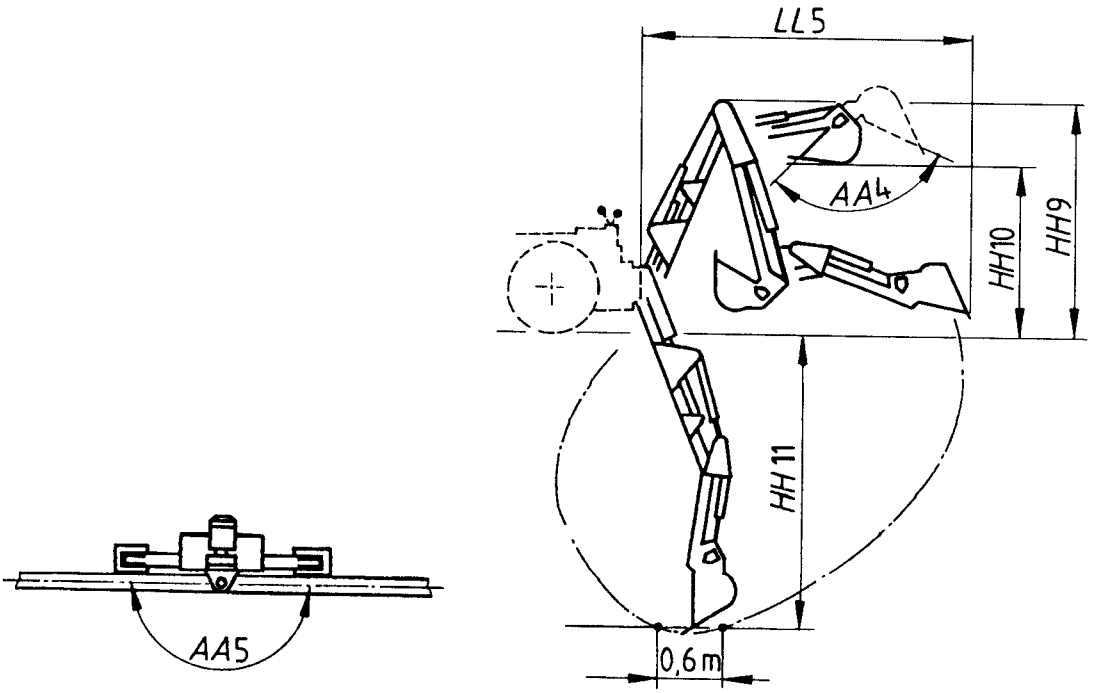

Figure 18 — Dimensions of backhoe

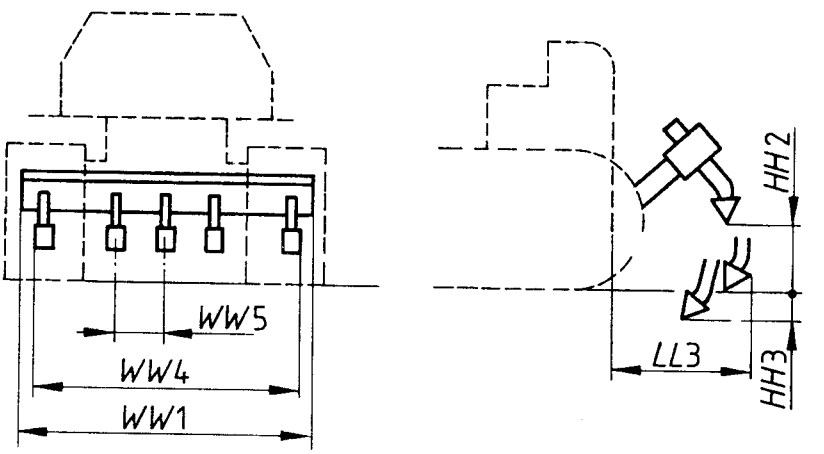

Figure 19 — Dimensions of scarifier

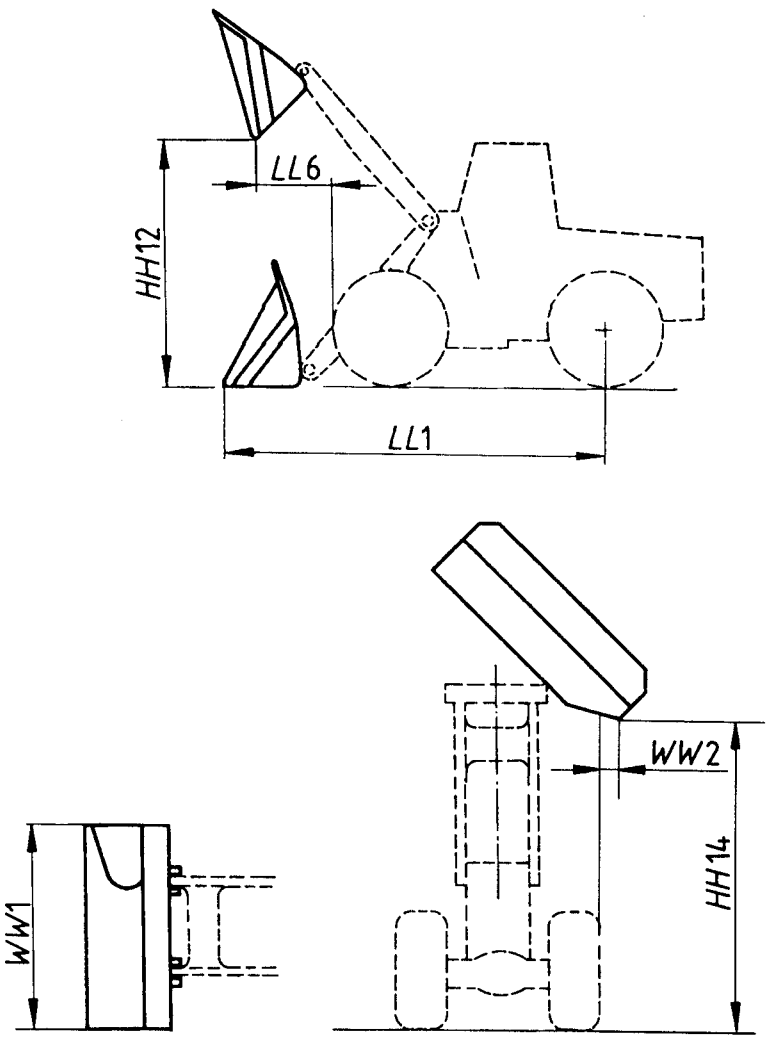

Figure 20 — Dimensions of side dump bucket

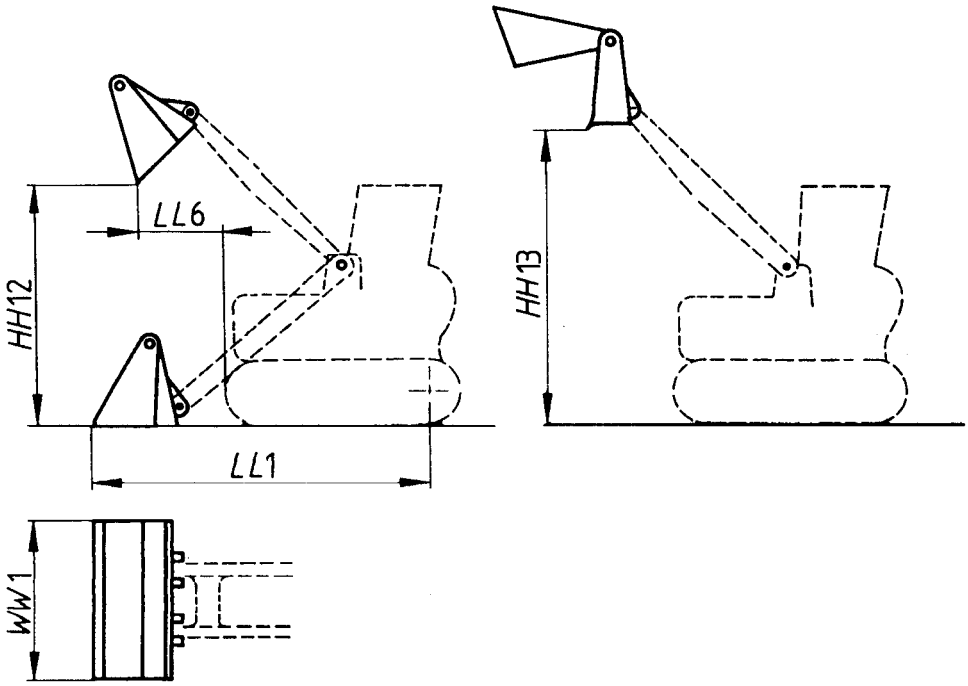

Figure 21 — Dimensions of multi-purpose bucket

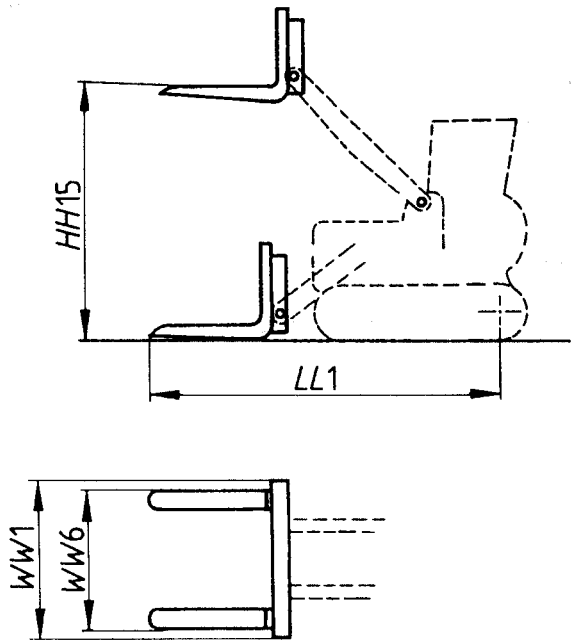

Figure 22 — Dimensions of pallet fork

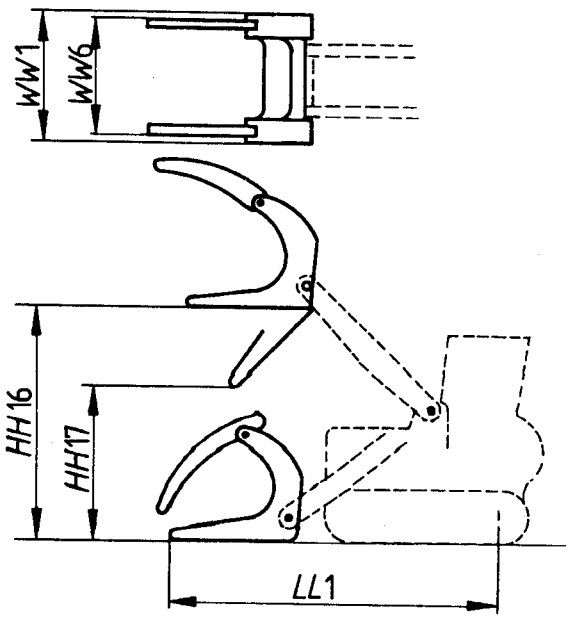

Figure 23 — Dimensions of log fork (log grapple)

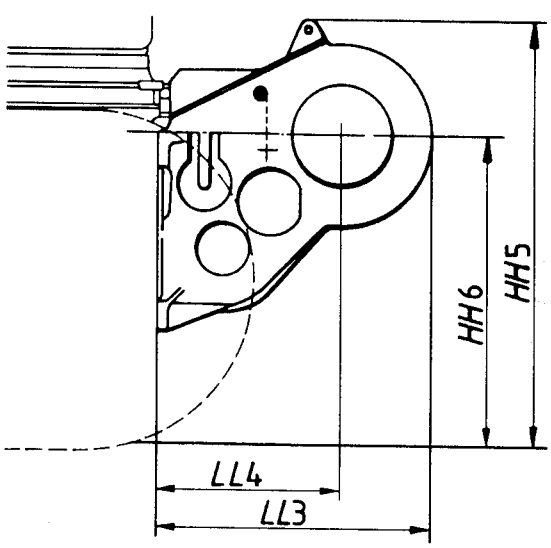

Figure 24 — Dimensions of winch

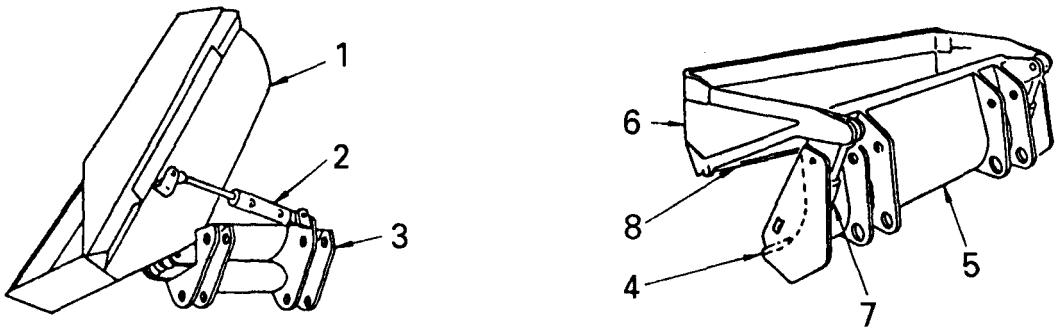

a) Side dump bucket

b) Multi-purpose bucket

1	Bucket	5	Mouldboard
2	Cylinder, side dump	6	Clam section
3	Bucket support with carrier	7	Cylinder, clam
4	Cutting edge, mouldboard	8	Clam cutting edge

Figure 25 — Nomenclature for attachments

6.11 Turning radius

See ISO 7457.

6.12 Lifting capacity

See ISO 8313.

7 Commercial literature specifications

The following information shall be specified in commercial literature.

SI units shall be used.

7.1 Engine

The following information shall be specified:

a) manufacturer and model;

b) ignition type, i.e. diesel or spark-ignition;

c) type of cycle, i.e. two- or four-stroke;

d) form of air aspiration, i.e. naturally aspirated, mechanically supercharged or turbocharged;

e) number of cylinders;

f) bore;

g) stroke;

h) displacement;

i) cooling system, i.e. air- or water-cooled;

j) type of fuel;

k) ISO net flywheel power at a given engine speed;

l) maximum torque at a given engine speed;

m) starter type;

n) electrical system voltage.

7.2 Transmission

The transmission type shall be specified.

EXAMPLES

Manual shift with flywheel clutch

Powershift with torque converter

Hydrostatic

Electric

Number of speeds (forward and reverse)

Maximum travel speeds (forward, reverse)

7.3 Hydraulic system

The following information shall be specified:

a) cylinders (number, type and dimensions)
   — lift,
   — tilt;

b) pump flow at a given pressure, at rated engine speed;

c) main relief valve opening pressure.

7.4 Filtration system

The type shall be specified:

a) engine;

b) transmission;

c) steering and braking;

d) hydraulic.

7.5 Crawler loaders

7.5.1 Steering and braking

The type of steering and braking shall be specified.

EXAMPLES

Type (drum, disc, wet or dry)

Actuating system (hydraulic, mechanical)

7.5.2 Final drive

The type of final drive shall be specified.

EXAMPLES

Type (single or double reduction, planetary)

Ratio

Lubrication

7.5.3 Track

The type of track shall be specified, including:

a) dimensions;

b) ground contact area;

c) number of shoes (each side);

d) number of rollers (each side).

7.6 Wheel loaders

7.6.1 Driving axle

The type of driving axle shall be specified.

EXAMPLES

Fixed versus oscillating

Bevel gear and pinion

Differential

Two-speed

Hydrostatic

Planetary final drive

7.6.2 Steering

7.6.2.1 The type of steering shall be specified (see ISO 5010).

EXAMPLES

Articulated

Front wheel steer

Boosted, manual, hydrostatic

Emergency steer method

7.6.2.2 The following performance information shall be specified:

a) turning radius, left and right;

b) articulation angle;

c) machine clearance diameter.

7.6.3 Brakes

7.6.3.1 The type and actuating system of the service brakes shall be specified.

EXAMPLES

Type (drum, disc, wet or dry)

Actuating system type (mechanical, full air, full hydraulic, air over hydraulic, etc.)

7.6.3.2 The type and actuating system of the parking brake shall be specified.

7.6.3.3 The type and actuating system of the secondary brakes shall be specified.

7.6.3.4 The brake performance shall be specified (see ISO 3450).

7.6.4 Tyres

The following information shall be specified:

a) size and type;

b) tread;

c) ply rating;

d) rim size.

7.7 System fluid capacities

The following information shall be specified:

a) fuel tank;

b) engine crankcase;

c) cooling system;

d) transmission;

e) transfer case;

f) hydraulic system;

g) axles;

h) final drives.

7.8 Characteristics which may be affected by bucket selections (machine equipped with non-standard tyres)

The following characteristics may be affected:

a) bucket capacity (nominal heaped);

b) overall operating height;

c) overall length;

d) dump angle;

e) dump height;

f) reach, fully raised;

g) rollback (specify height);

h) maximum rollback at ground;

i) carry position;

j) maximum rollback at carry position;

k) digging depth;

l) bucket width;

m) maximum grading angle;

n) operating mass[2];

o) operating load;

p) tipping load[2];

q) tipping load (at specified height)[2];

r) breakout force[2];

s) machine clearance radius[3].

---

2) May be further affected by tyre selection, tyre ballast, counterweight, or attachments.

3) May be further affected by tyre selection.

Annex A
(normative)

Base machine — Dimensions — Symbols, terms and definitions

Symbol	Term	Definition	Drawing
$H6$	Digging depth	Distance on "Z" coordinate between the ground reference plane (GRP) and the bottom of the bucket cutting edge at the lowest position with the bucket cutting edge horizontal.	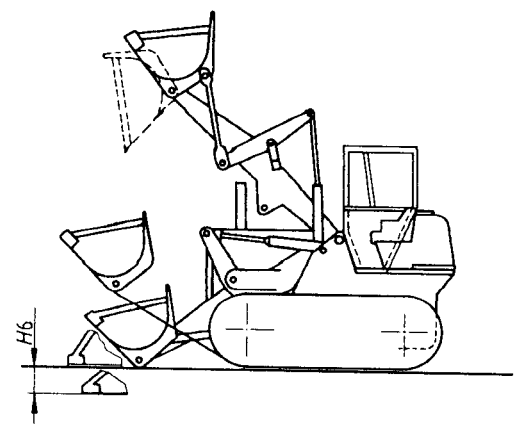
$H7$	Carry position (height)	Distance on "Z" coordinate between the GRP and the centreline of the bucket hinge pin, with the angle of approach at 15° to the lowest point of the bucket or lift arms, whichever is the lower, with the bucket at maximum rollback.	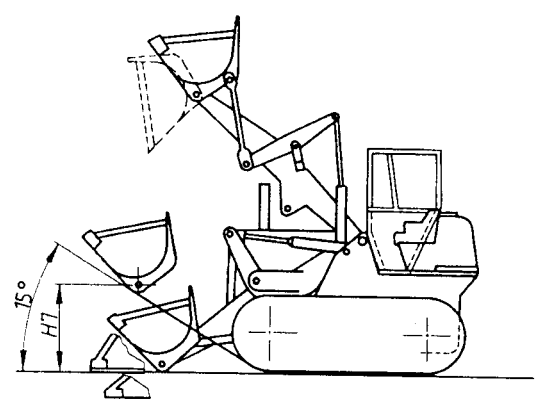
$H8$	Dump height	Distance on "Z" coordinate between the GRP and the lowest point of the cutting edge, with the bucket hinge pin at maximum height and the bucket at a 45° dump angle. If the dump angle is less than 45°, specify the angle.	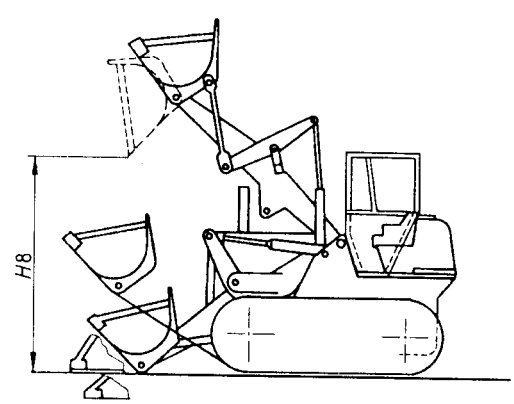

Symbol	Term	Definition	Drawing
$H9$	Height to hinge pin, fully raised	Distance on "Z" coordinate between the GRP and the centreline of the bucket hinge pin with a fully raised bucket.	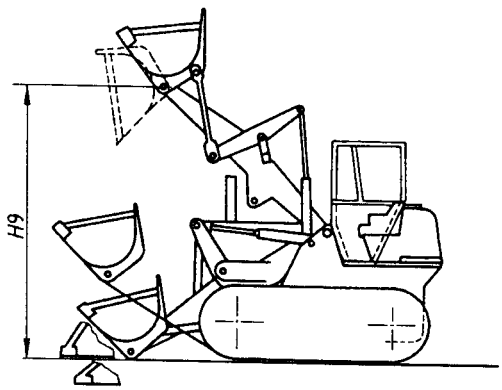
$H10$	Overall operating height, fully raised	Distance on "Z" coordinate between the GRP and the highest point obtainable with a fully raised bucket.	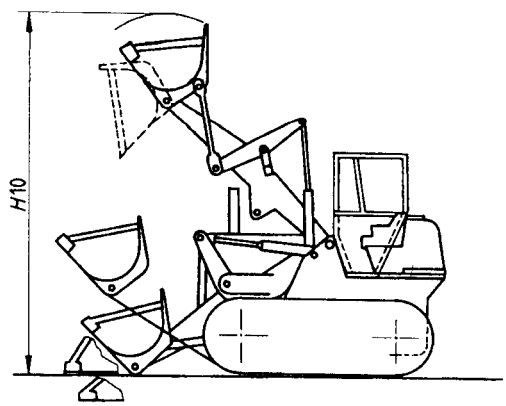
$W5$	Bucket width	Distance on "Y" coordinate between two "Y" planes passing through the farthest point on the sides of the bucket.	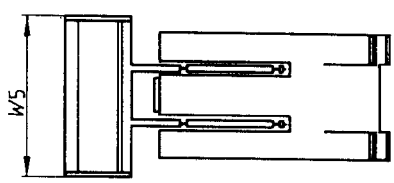
$L6$	Reach, fully raised	Distance on "X" coordinate between planes passing through the foremost point on the machine (including tyres; tracks or loader frame) and the foremost point on the cutting edge with the bucket hinge pin at maximum height and the bucket at a 45° dump angle. If the dump angle is less than 45° specify the angle.	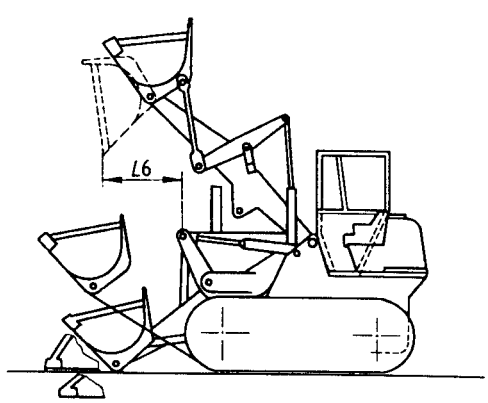

Symbol	Term	Definition	Drawing
$L7$	Overall length (with bucket)	Distance on "X" coordinate between planes passing through the rearmost point of the machine and the foremost point of the cutting edge with the bucket bottom on the ground and level.	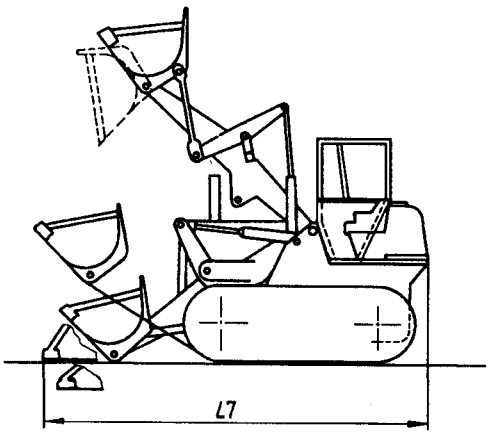
$R3$	Minimum turning radius with bucket in carry position	Distance on "Z" plane between the turning centre and the farthest point on the side of the bucket when the machine is executing its smallest practicable turn.	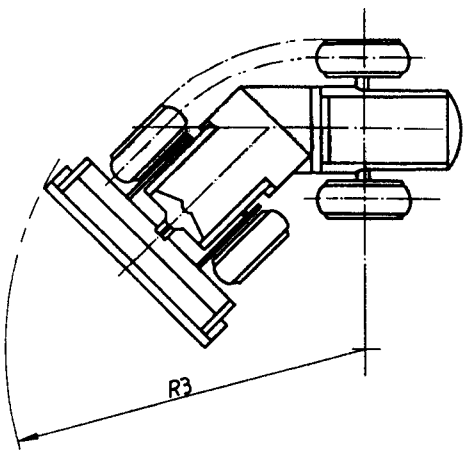
$A2$	Dump angle	Maximum angle that the longest flat section of the inside bottom of the bucket will rotate below horizontal with the bucket in the fully raised position.	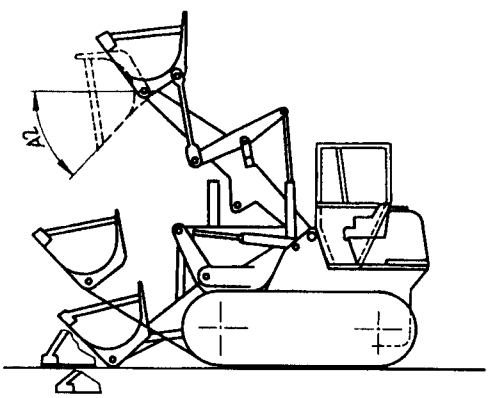

Symbol	Term	Definition	Drawing
$A3$	Maximum rollback, fully raised	Angle from the bucket cutting edge horizontal position to the maximum rollback position, lift arms fully raised.	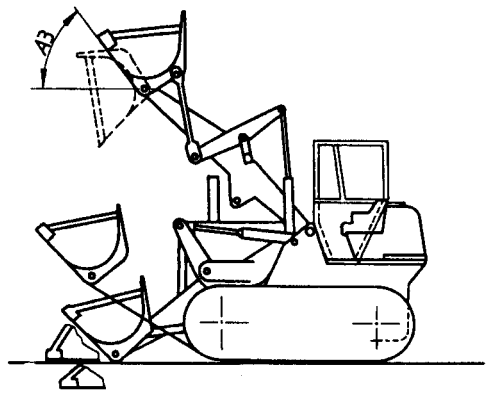
$A4$	Maximum rollback at ground	Maximum rollback angle without movement of the lift arm, starting with the bottom of the cutting edge on the GRP.	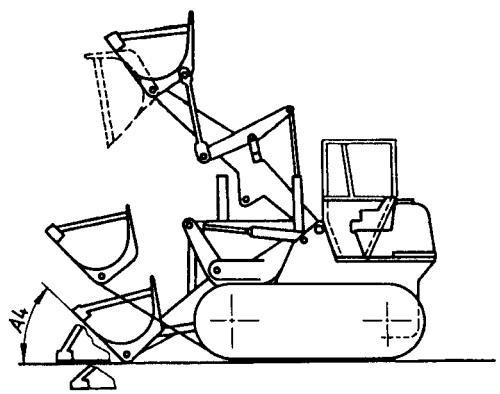
$A5$	Maximum rollback at carry position	Angle from the bucket cutting edge horizontal position to the maximum rollback position, with lift arms in the carry position. See $H7$.	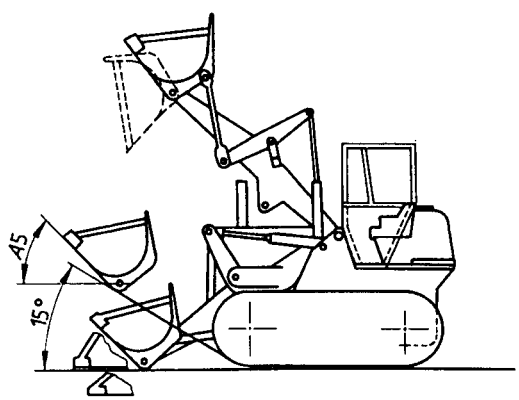
$A6$	Maximum grading angle	Maximum angle that the bucket cutting edge will rotate below the horizontal with the bucket cutting edge on the GRP.	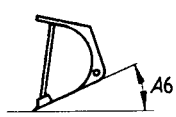

Annex B
(normative)

Equipment and attachments — Dimensions — Symbols, terms and definitions

Symbol	Term	Definition	Drawing
$HH9$	Transport height	Distance on "Z" coordinate between the GRP and the highest point of the backhoe fitted in its transport position.	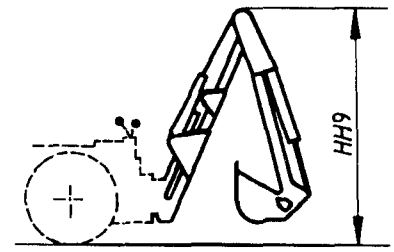
$HH10$	Loading height	Distance on "Z" coordinate between the GRP and the lowest point of the bucket in loading position.	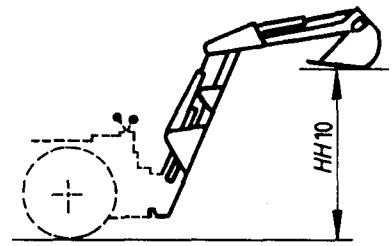
$HH11$	Digging depth	Distance on "Z" coordinate between the GRP and the "Z" plane, positioned on a flat bottom trench 0,6 m in length generated by the bucket cutting edge or teeth.	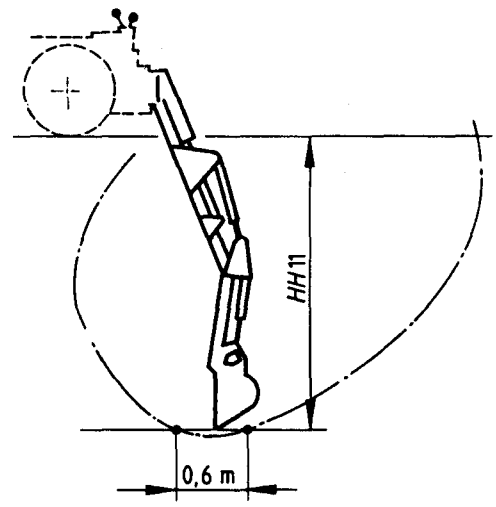

Symbol	Term	Definition	Drawing
$HH12$	Maximum dump height, clam closed	Distance on "Z" coordinate between the GRP and the lowest point on the bucket cutting edge, with clam closed, with the bucket hinge at maximum height and the bucket at maximum dump angle.	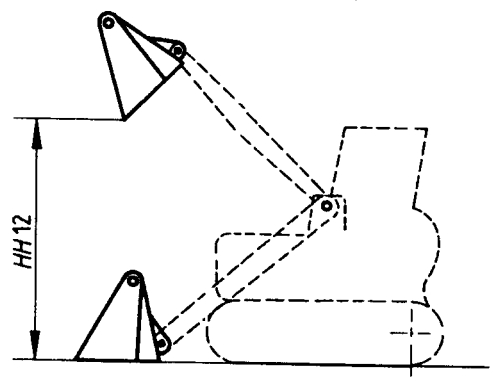
$HH13$	Maximum dump height, clam open	Distance on "Z" coordinate between the GRP and the lowest point on the mouldboard cutting edge (clam open), with the bucket hinge pin at maximum height and the bottom of the mould-board section of the bucket horizontal.	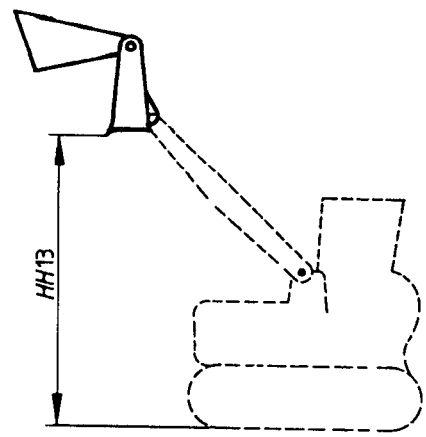
$HH14$	Maximum dump height, side	Distance on "Z" coordinate between the GRP and the lowest point of the side dumping edge, with the bucket hinge pin at maximum height and the bucket at maximum side dump angle.	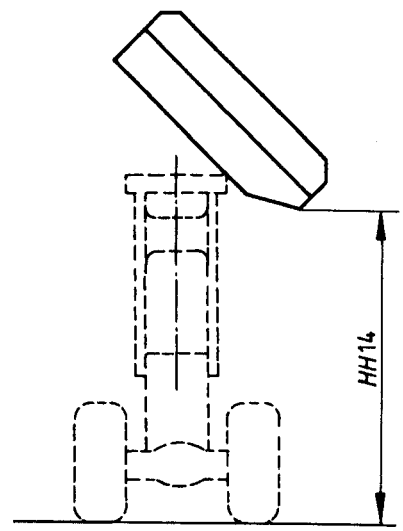

Symbol	Term	Definition	Drawing
$HH15$	Maximum lift height, tines level	Distance on "Z" coordinate between the GRP and the upper surface of tines, with the pallet fork hinge pin at maximum height and the tines level.	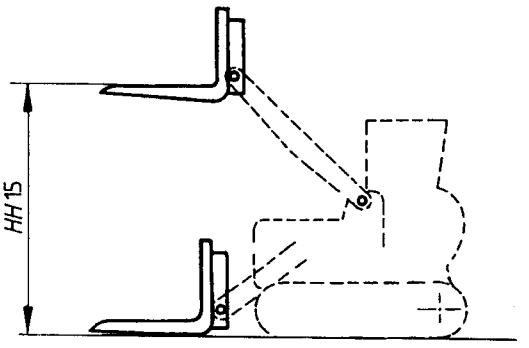
$HH16$	Height of level tines, fully raised	Distance on "Z" coordinate between the GRP and the lower surface of tines, with the fork hinge pin at maximum height and tines level.	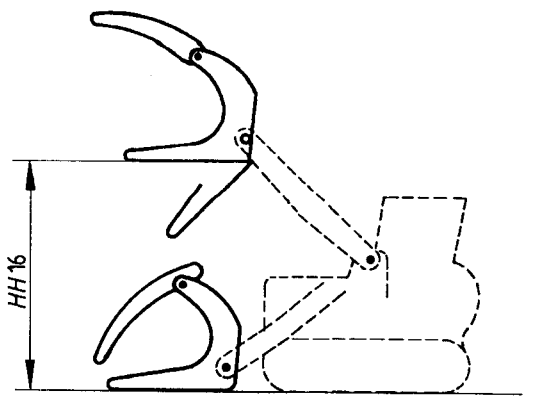
$HH17$	Height of tips of tines, fork fully raised and dumped	Distance on "Z" coordinate between the GRP and the tips of tines with the fork hinge pin at maximum height and in dump position.	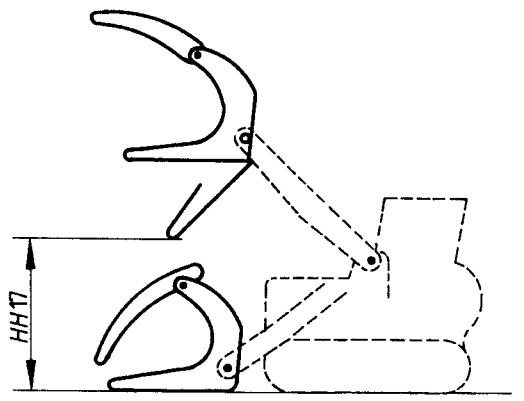

Symbol	Term	Definition	Drawing
$WW2$	Maximum side dump reach	Distance on "Y" coordinate between two "Y" planes passing through the foremost point on the machine (including tyres, tracks or loader frames) and the foremost point on the bucket cutting edge with the bucket hinge pin at maximum height and the bucket at maximum side dump angle.	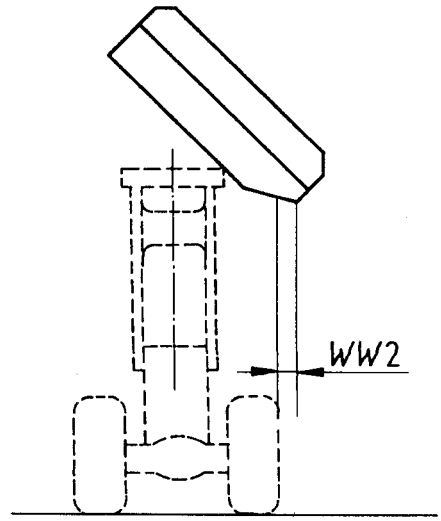
$WW6$	Tines width	Distance on "Y" coordinate between two "Y" planes passing through the outside face of external tines.	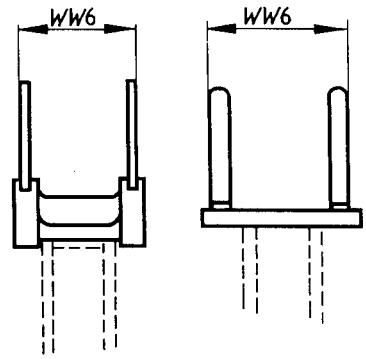
$LL6$	Reach fully raised	Distance on "X" coordinate between two "X" planes passing through the foremost point on the machine (including tyres, tracks or loader frames) and the rearmost point on the bucket cutting edge tip with the bucket hinge pin at maximum height and the bucket at maximum dump angle.	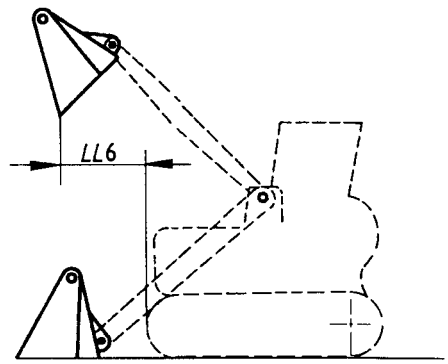

Symbol	Term	Definition	Drawing
$AA4$	Bucket rotation	Maximum rotation angle on "Y" plane described by the bucket during movement around the hinge pin.	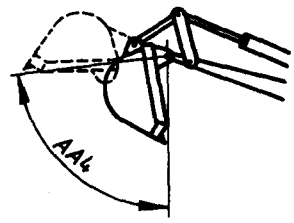
$AA5$	Swing angle	Maximum swing angle on "Z" plane described by the backhoe boom during movement around the swing pivot axis.	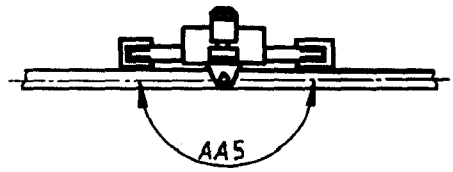

AMENDMENT NO. 1

Page 5, 4.3

Replace Figure 10 with the following.

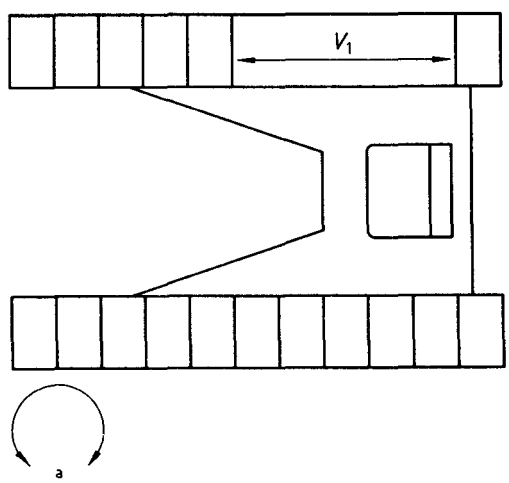

a Steerable track.

Figure 10 — Crawler pivot steer

Page 5, 4.3

Replace Figure 11 with the following.

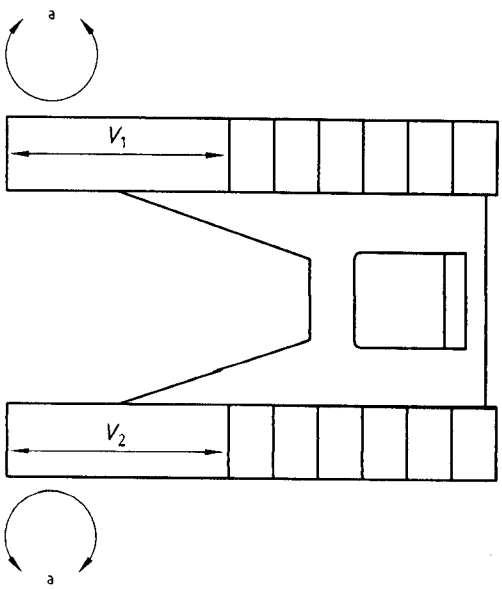

a Steerable track.

Figure 11 — Crawler independent steer

(*Continued from second cover*)

International Standard	*Title*
ISO 5998 : 1986[1)]	Earth-moving machinery — Rated operating load for crawler and wheel loaders
ISO 6014 : 1986	Earth-moving machinery — Determination of ground speed
ISO 6016 : 1998	Earth-moving machinery — Methods of measuring the masses of whole machines, their equipment and components
ISO 7457 : 1983	Earth-moving machinery — Measurement of turning dimensions of wheeled machines
ISO 8313 : 1989[1)]	Earth-moving machinery — Loaders — Method of measuring tool forces and tipping loads

Amendment No. 1 has been given at the end of this publication.

This standard supersedes IS 11114 (Part 4) : 1993 'Earth-moving machinery — Definitions of dimensions and symbols: Part 4 Loaders — Terminology and commercial specifications'.

For the purpose of deciding whether a particular requirement of this standard is complied with, the final value, observed or calculated, expressing the result of a test or analysis, shall be rounded off in accordance with IS 2 : 1960 'Rules for rounding off numerical values (*revised*)': The number of significant places retained in the rounded off value should be the same as that of the specified value in this standard.

[1)] Withdrawn

Bureau of Indian Standards

BIS is a statutory institution established under the *Bureau of Indian Standards Act*, 1986 to promote harmonious development of the activities of standardization, marking and quality certification of goods and attending to connected matters in the country.

Copyright

BIS has the copyright of all its publications. No part of these publications may be reproduced in any form without the prior permission in writing of BIS. This does not preclude the free use, in the course of implementing the standard, of necessary details, such as symbols and sizes, type or grade designations. Enquiries relating to copyright be addressed to the Director (Publications), BIS.

Review of Indian Standards

Amendments are issued to standards as the need arises on the basis of comments. Standards are also reviewed periodically; a standard along with amendments is reaffirmed when such review indicates that no changes are needed; if the review indicates that changes are needed, it is taken up for revision. Users of Indian Standards should ascertain that they are in possession of the latest amendments or edition by referring to the latest issue of 'BIS Catalogue' and 'Standards: Monthly Additions'.

This Indian Standard has been developed from Doc: No. MED 07 (905).

Amendments Issued Since Publication

Amend No.	Date of Issue	Text Affected

BUREAU OF INDIAN STANDARDS

Headquarters:

Manak Bhavan, 9 Bahadur Shah Zafar Marg, New Delhi 110002
Telephones: 2323 0131, 2323 3375, 2323 9402 *website* : www.bis.org.in

Regional Offices:		Telephones
Central	: Manak Bhavan, 9 Bahadur Shah Zafar Marg NEW DELHI 110002	2323 7617 2323 3841
Eastern	: 1/14 C.I.T. Scheme VII M, V.I.P. Road, Kankurgachi KOLKATA 700054	2337 8499, 2337 8561 2337 8626, 2337 9120
Northern	: SCO 335-336, Sector 34-A, CHANDIGARH 160022	260 3843 260 9285
Southern	: C.I.T. Campus, IV Cross Road, CHENNAI 600113	2254 1216, 2254 1442 2254 2519, 2254 2315
Western	: Manakalaya, E9 MIDC, Marol, Andheri (East) MUMBAI 400093	2832 9295, 2832 7858 2832 7891, 2832 7892

Branches : AHMEDABAD. BANGALORE. BHOPAL. BHUBANESHWAR. COIMBATORE. FARIDABAD. GHAZIABAD. GUWAHATI. HYDERABAD. JAIPUR. KANPUR. LUCKNOW. NAGPUR. PARWANOO. PATNA. PUNE. RAJKOT. THIRUVANANTHAPURAM. VISAKHAPATNAM.

Printed at Simco Printing Press, Delhi